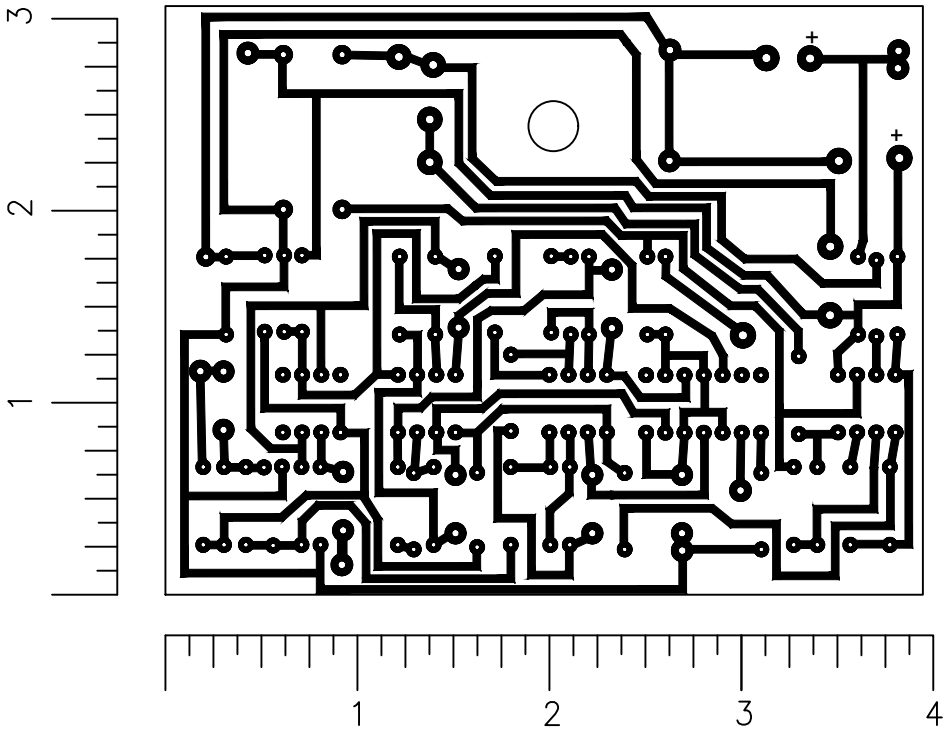

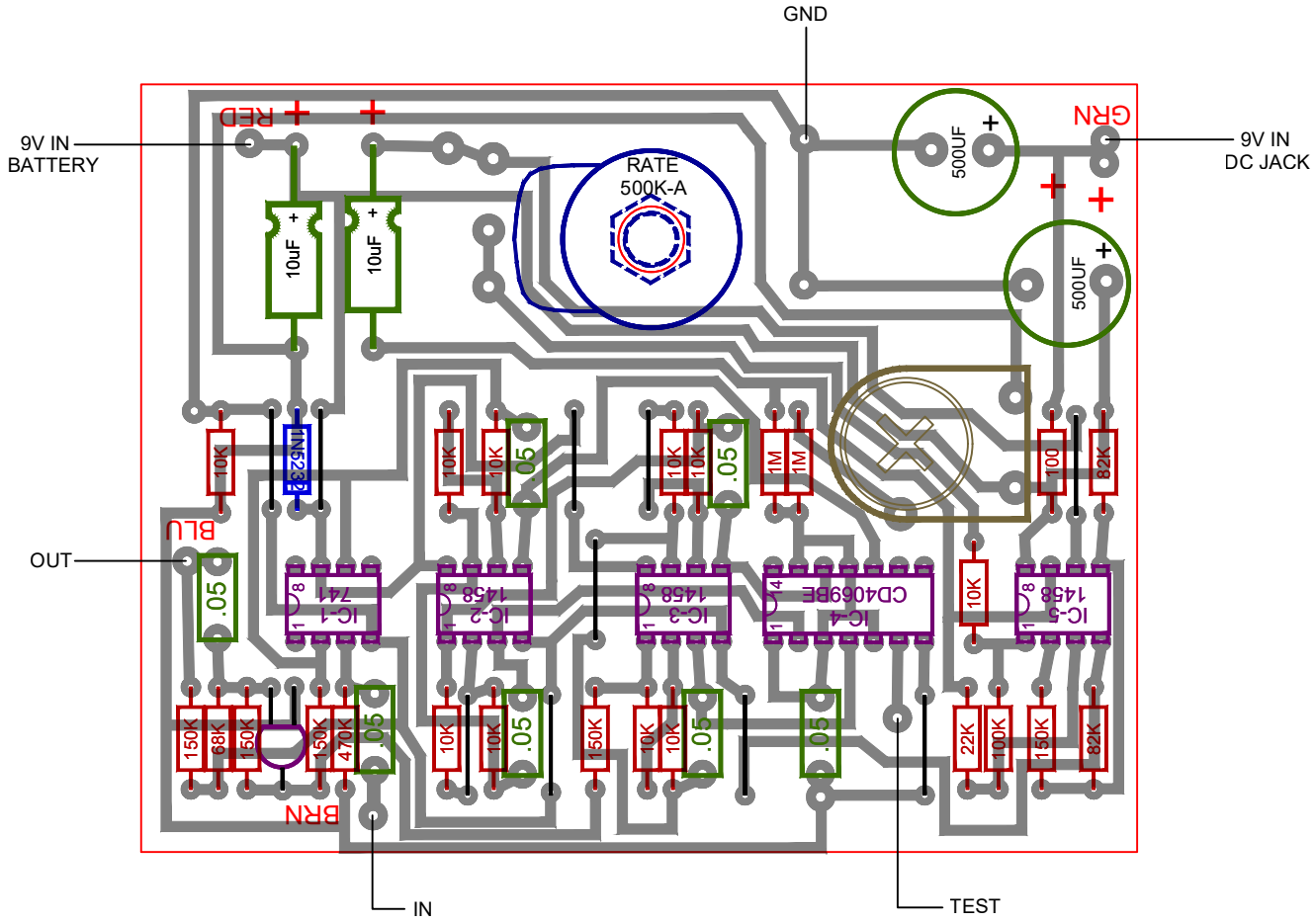

AMPEG "PHAZZER"
ORIGINAL PCB AS-BUILT

DRAWN BY PAUL MAROSSY
DEC. 21, 2021